WORKSWELL
WIRIS MINI

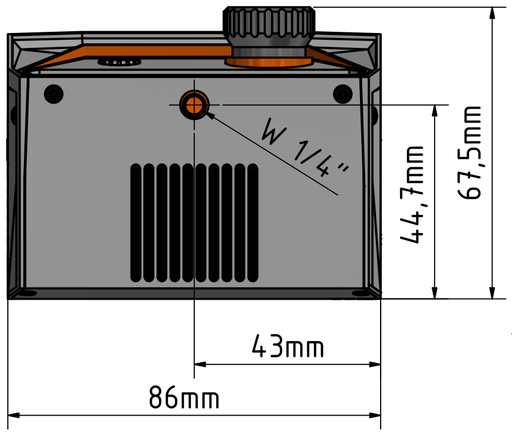
W 1/4"
44,7mm
67,5mm
43mm
86mm

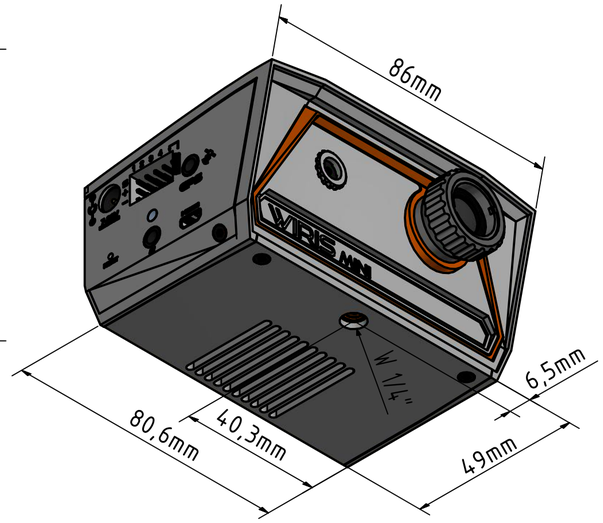
86mm
WIRIS MINI
W 1/4"
6,5mm
80,6mm
40,3mm
49mm

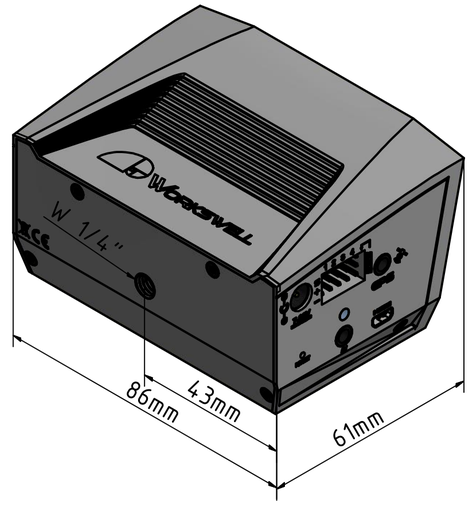
WORKSWELL
W 1/4"
86mm
43mm
61mm

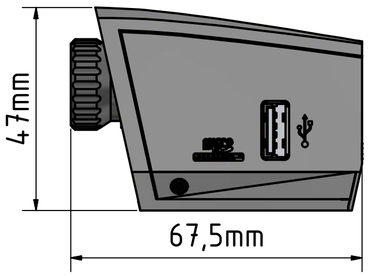
47mm
67,5mm

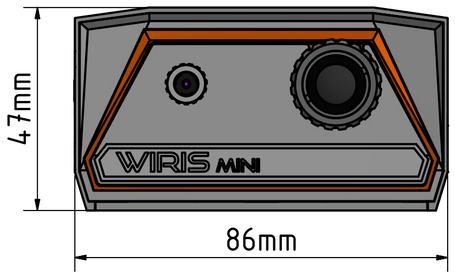
47mm
WIRIS MINI
86mm

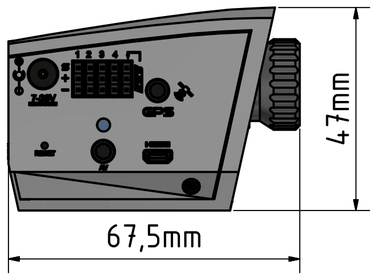
47mm
67,5mm

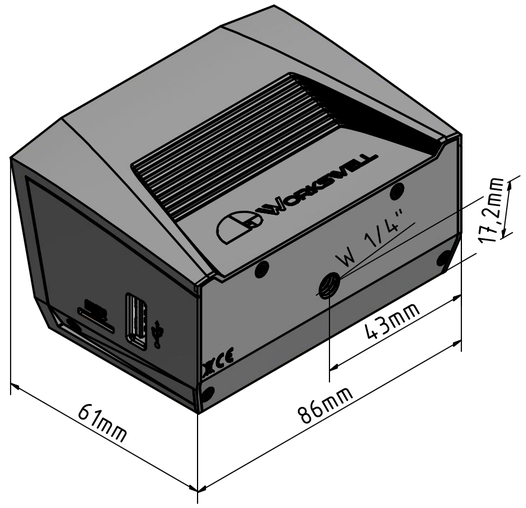
WORKSWELL
W 1/4"
17,2mm
43mm
61mm
86mm

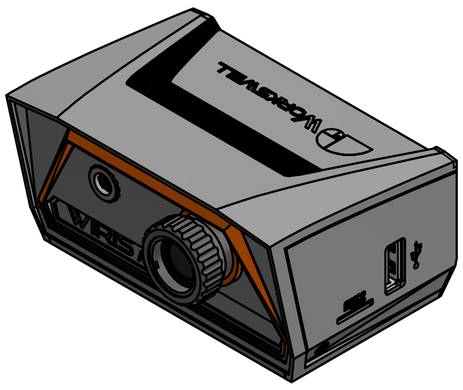
WORKSWELL
WIRIS

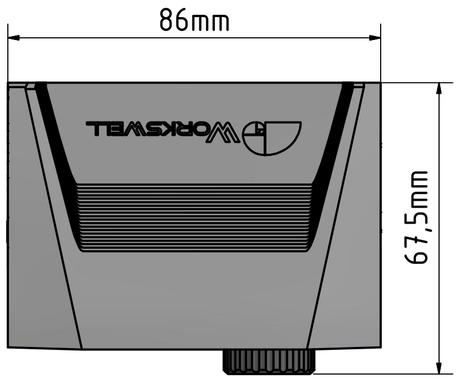
86mm
WORKSWELL
67,5mm

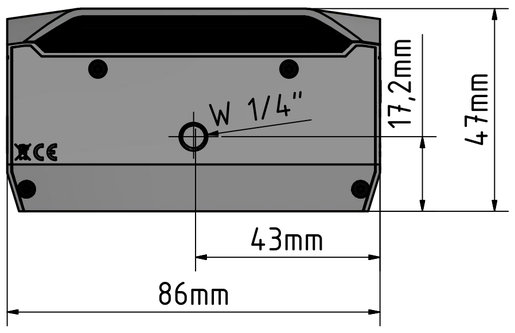
W 1/4"
17,2mm
47mm
43mm
86mm

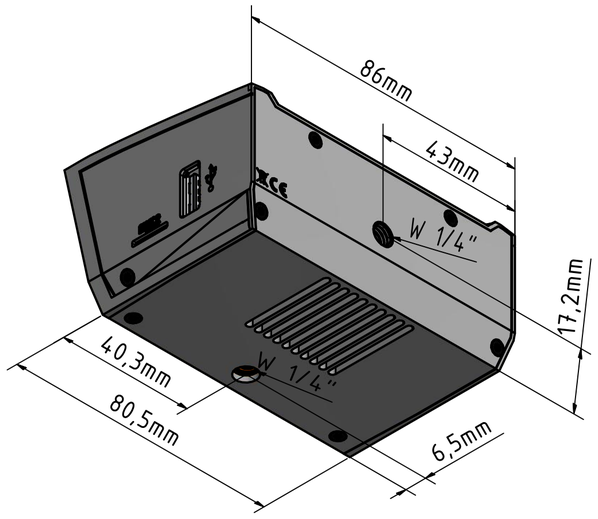
86mm
43mm
W 1/4"
17,2mm
40,3mm
W 1/4"
80,5mm
6,5mm